TRIANGLE ENGINEERING

engineered to perform e

90% built in 7 days 7

durability for decades 10

RVI Series Industrial Wall-Mounted Supply Fans

Triangle Engineering's RVI Series belt-drive wall supply fans deliver high-volume intake ventilation for tough industrial environments. A galvanized wall box and powder-coated venturi ensure rugged performance while driving fresh air into workspaces to improve air quality and balance ventilation. Each unit ships fully assembled, factory-tested, and includes an automatic belt tensioner on ODP or TE motors up to 1.5 hp for easier maintenance and longer belt life. With blade sizes from 24" to 60" and up to 5 hp, RVI fans adapt to nearly any facility power setup.

KEY FEATURES

- Belt-drive system
- Wall-mounted design
- Easy in-building servicing
- Flexible motor & voltage options
- Factory-installed galvanized wall box
- Rolled inlet venturi
- Ships fully assembled and tested
- Easy installation in framed opening

IDEAL USE CASES

Manufacturing Plants: Control heat, fumes, contaminants

Warehouses/Distribution: Flush hot, stale air

Auto & Aerospace: Deliver clear air, clear fumes

Food & Beverage Plants: Control humidity, steam, odors

Data/Crypto Mining: Push/pull air, enable outside maintenance

Large Commercial Buildings: Improve air quality in big spaces

Why **RVI Series?**

TRIANGLE ENGINEERING

Reliability and Durability

Engineered and built in the USA with a blend of domestic and foreign components, Triangle Engineering constructs the RVI Series to meet the toughest industrial standards, ensuring dependable ventilation for years.

Simple Maintenance

Service belts, motors, and pulleys from inside the facility, eliminating outdoor equipment and complex procedures. Certain models also feature an automatic belt tensioner, reducing upkeep and extending belt life.

Enhanced Workplace Conditions

RVI supply fans improve air quality, comfort, and productivity by introducing fresh air and reducing heat, humidity, and airborne contaminants, creating safer, more balanced environments in factories, warehouses, and other demanding facilities.

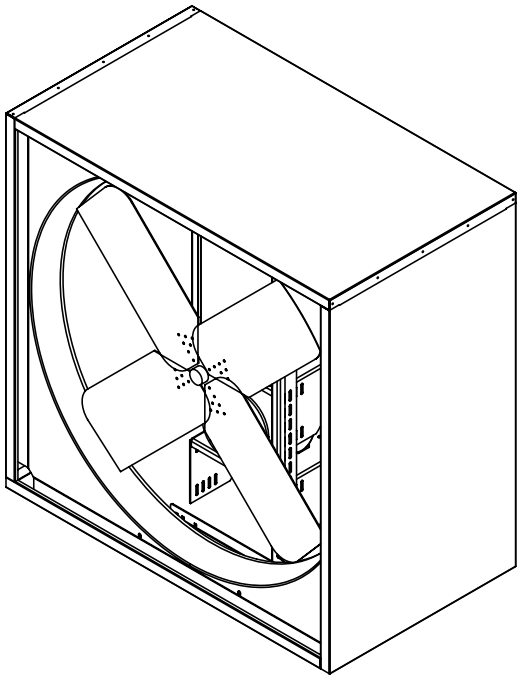

Technical Specifications

Blade Diameters
23”. 30”, 36”, 42”, 48”, 54”, 60”

Automatic Belt Tensioner
Included on ODP or TE models up to 1.5 hp

Drive Access
Belts, pulleys, and motor are serviceable from inside the building.

Fully Assembled & Factory-Tested
Ready for immediate installation and operation. Factory wired with plug available on certain single phase models.

Construction
Built with sturdy, industrial-grade materials and maintenance-friendly details to ensure reliable performance in tough environments.

Ambient Temperature Rating
Suitable for applications up to 110°F. If your operation regularly exceeds 110°F, please contact us about higher ambient temperature motors.

Motor Information

Motor Horsepower
From 1/2 hp up to 5 hp

Standard Voltages
Single-phase: 115V, 230V

Three-phase: 230V, 460V

(*Additional options: 277V, 208V, 415V, 575V*)

Motor Enclosure
Available in ODP, TE, or HL

RVI Series Performance Specifications

Diameter	HP	Performance				Approximate Weight (lbs)
		0.0” SP	0.125” SP	0.25” SP	0.5” SP	
24”	1/2	5,000	4,250	3,430	----	125
30”	1/2	9,180	7,880	6,430	----	132
	3/4	9,840	8,650	7,190	----	135
36”	1/2	10,800	8,840	6,550	----	150
	3/4	12,600	10,550	6,880	----	165
	1	13,340	11,500	9,160	----	175
	1 1/2	14,790	13,080	11,440	----	185
	2	16,900	15,440	13,380	8,250	190
	3	15,400	14,200	13,000	9,970	200
42”	1/2	13,160	10,050	4,270	----	190
	3/4	15,050	12,320	7,700	----	195
	1	16,570	14,210	10,900	----	205
	1 1/2	17,950	15,760	13,030	----	220
	2	22,050	20,040	18,150	11,790	210
48”	3/4	19,100	14,300	6,160	----	223
	1	20,600	16,000	7,770	----	233
	1 1/2	21,500	16,400	10,400	----	236
	2	21,100	19,000	16,500	----	278
	3	23,700	21,500	19,300	----	292
	5	28,800	26,800	24,500	18,400	300
54”	2	25,500	22,300	19,900	----	360
	3	29,800	27,100	24,600	----	370
	5	37,300	35,000	32,600	25,500	380
60”	2	30,600	27,100	23,150	----	440
	3	34,500	31,600	28,500	19,250	445
	5	41,000	38,600	36,100	30,300	450

Division “RVI” Series			
Diameter	A	B	C
24”	30 3/4”	30 3/4”	Varies by Horsepower
30”	34 3/4”	34 3/4”	
36”	40 3/4”	40 3/4”	
42”	46 3/4”	46 3/4”	
48”	52 3/4”	52 3/4”	
54”	62 7/8”	62 7/8”	
60”	68 7/8”	68 7/8”	

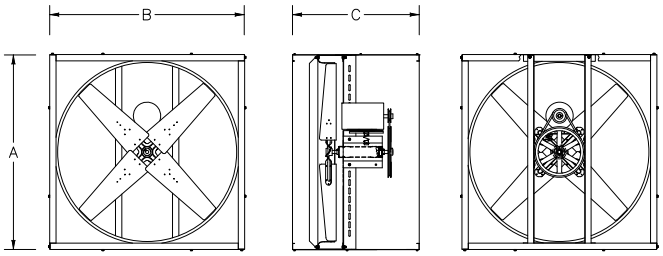

TRIANGLE ENGINEERING

RVI Series Ordering & Model Information

Diameter	HP	1-Phase (115/230V)		3-Phase (230/460V)		Hazardous Location*	
		Open Drip Proof Motor	Totally Enclosed Motor	Open Drip Proof Motor	Totally Enclosed Motor	1-Phase	3-Phase
24”	1/2	RVI2413-V (115V) RVI2413-W (230V)	RVI2413T-U	RVI2413-X	RVI2413T-X	RVI2413HL-U	RVI2413HL-X
30”	1/2	RVI3013-V (115V) RVI3013-W (230V)	RVI3013T-U	RVI3013-X	RVI3013T-X	RVI3013HL-U	RVI3013HL-X
	3/4	RVI3014-U	RVI3014T-U	RVI3014-X	RVI3014T-X	RVI3014HL-U	RVI3014HL-X
36”	1/2	RVI3613-V (115V) RVI3613-W (230V)	RVI3613T-U	RVI3613-X	RVI3613T-X	RVI3613HL-U	RVI3613HL-X
	3/4	RVI3614-U	RVI3614T-U	RVI3614-X	RVI3614T-X	RVI3614HL-U	RVI3614HL-X
	1	RVI3615-U	RVI3615T-U	RVI3615-X	RVI3615T-X	RVI3615HL-U	RVI3615HL-X
	1 1/2	RVI3616-U	RVI3616T-U	RVI3616-X	RVI3616T-X	RVI3616HL-U	RVI3616HL-X
	2	RVI3617-U	----	RVI3617-X	RVI3617T-X	RVI3617HL-U	RVI3617HL-X
	3	RVI3618-U	----	RVI3618-X	RVI3618T-X	----	RVI3618HL-X
42”	1/2	RVI4213-V (115V) RVI4213-W (230V)	RVI4213T-U	RVI4213-X	RVI4213T-X	RVI4213HL-U	RVI4213HL-X
	3/4	RVI4214-U	RVI4214T-U	RVI4214-X	RVI4214T-X	RVI4214HL-U	RVI4214HL-X
	1	RVI4215-U	RVI4215T-U	RVI4215-X	RVI4215T-X	RVI4215HL-U	RVI4215HL-X
	1 1/2	RVI4216-U	RVI4216T-U	RVI4216-X	RVI4216T-X	RVI4216HL-U	RVI4216HL-X
	2	RVI4216-U	RVI4217T-U	RVI4216-X	RVI4217T-X	----	----
48”	3/4	RVI4814-U	RVI4814T-U	RVI4814-X	RVI4814T-X	RVI4814HL-U	RVI4814HL-X
	1	RVI4815-U	RVI4815T-U	RVI4815-X	RVI4815T-X	RVI4815HL-U	RVI4815HL-X
	1 1/2	RVI4816-U	RVI4816T-U	RVI4816-X	RVI4816T-X	RVI4816HL-U	RVI4816HL-X
	2	RVI4817-U	RVI4817T-U	RVI4817-X	RVI4817T-X	RVI4817HL-U	RVI4817HL-X
	3	RVI4818-U	----	RVI4818-X	RVI4818T-X	RVI4818HL-U	RVI4818HL-X
	5	RVI4819-W (230V)	----	RVI4819-X	RVI4819T-X	----	RVI4819HL-X
54”	2	RVI5417-U	RVI5417T-U	RVI5417-X	RVI5417T-X	RVI5417HL-U	RVI5417HL-X
	3	RVI5418-U	----	RVI5418-X	RVI5418T-X	RVI5418HL-U	RVI5418HL-X
	5	RVI5419-W (230V)	----	RVI5419-X	RVI5419T-X	----	RVI5419HL-X
60”	2	RVI6017-U	RVI6017T-U	RVI6017-X	RVI6017T-X	RVI6017HL-U	RVI6017HL-X
	3	RVI6018-U	----	RVI6018-X	RVI6018T-X	RVI6018HL-U	RVI6018HL-X
	5	RVI6019-W (230V)	----	RVI6019-X	RVI6019T-X	----	RVI6019HL-X

*Hazardous location models are made to order and are not returnable.They come equipped with: no wiring, aluminum blades, and stationary motor mounts. Motor Ratings for belt drive models: Single Speed, DIV. I, Class I, Group D & Class II, Groups F & G. Although this product is supplied with an explosion proof motor and blades with spark resistant aluminum paddles, it is not intended to convey the suitability of the overall finished product in a hazardous atmosphere, but only that the product has been supplied with certain components for this purpose. Application and wiring must be in accordance with local, state and national codes and performed by a qualified electrician. Fans not appropriate for use where paint residue can accumulate on motor or blade. Hazardous location motors cannot be run into service factor so fan performance may be slightly less than published.

TRIANGLE ENGINEERING

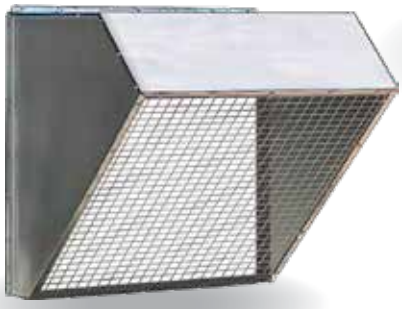

Available Accessories

Rainhoods

Provide a protective cover against exterior elements, keeping critical fan components dry.

Guards

Enclose moving parts to safeguard personnel and equipment..

Shutters/Dampers

Offered in standard sizes or custom increments (as small as 1/8”) to fit your opening. They regulate airflow, limit backdraft, and maintain optimal building pressure when the fan is off, preventing drafts from outside.

Why Choose Triangle Engineering?

A Legacy of Quality Since 1948

For more than seven decades, we have specialized in crafting top-tier ventilation products that stand up to demanding industrial environments. Our fans are factory-assembled, rigorously tested, and supported by an experienced customer service team.

Customized Solutions Available

Not seeing exactly what you need? We can customize our RVI Series supply fans to meet your specific airflow requirements, unique motor setups, specialized construction or non-standard materials like stainless steel or aluminum. Contact us to learn how we can optimize your intake air needs.

TriangleFans.com